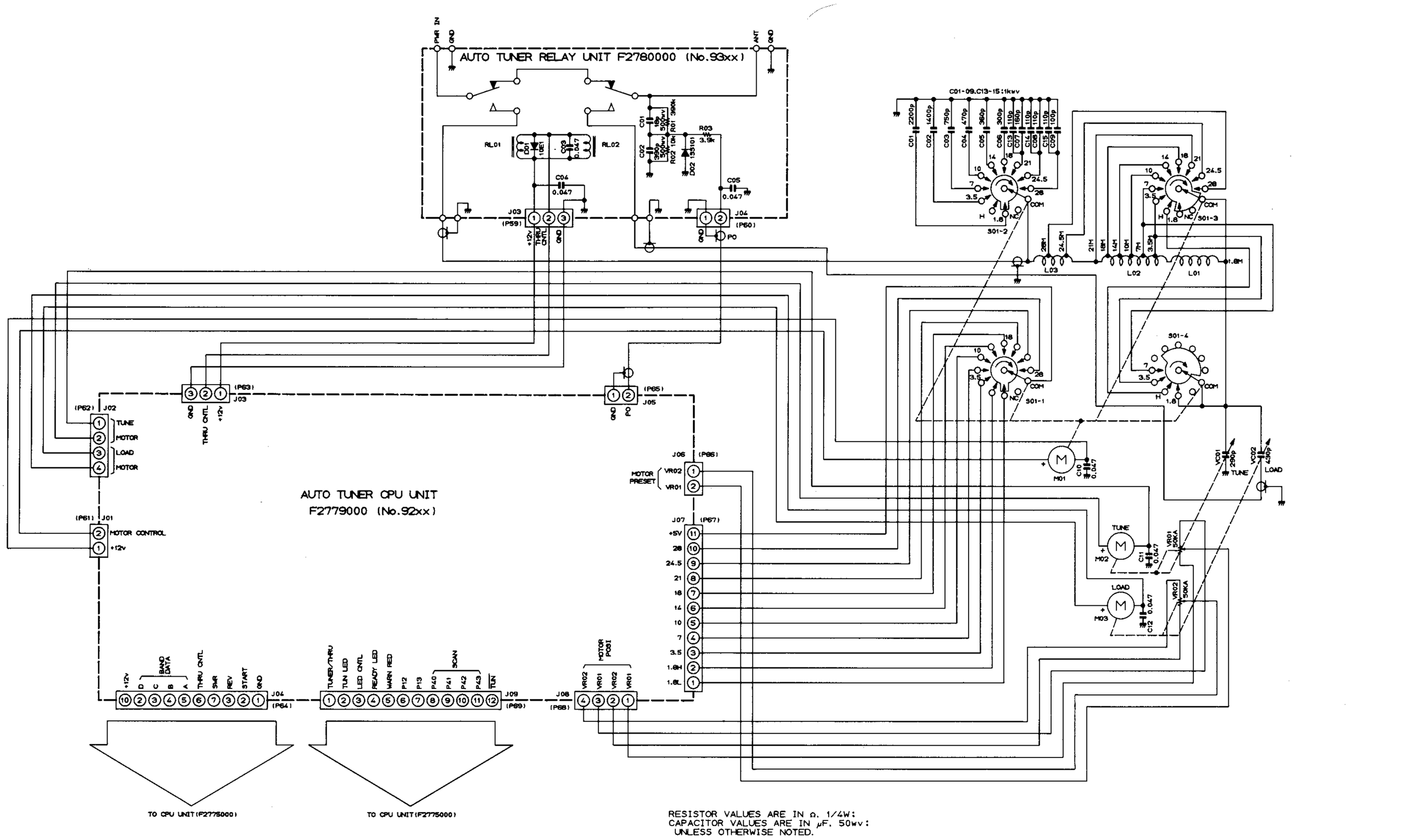

FL-7000

AUTO TUNER CONNECTION DIAGRAM

Downloaded by
Amateur Radio Directory

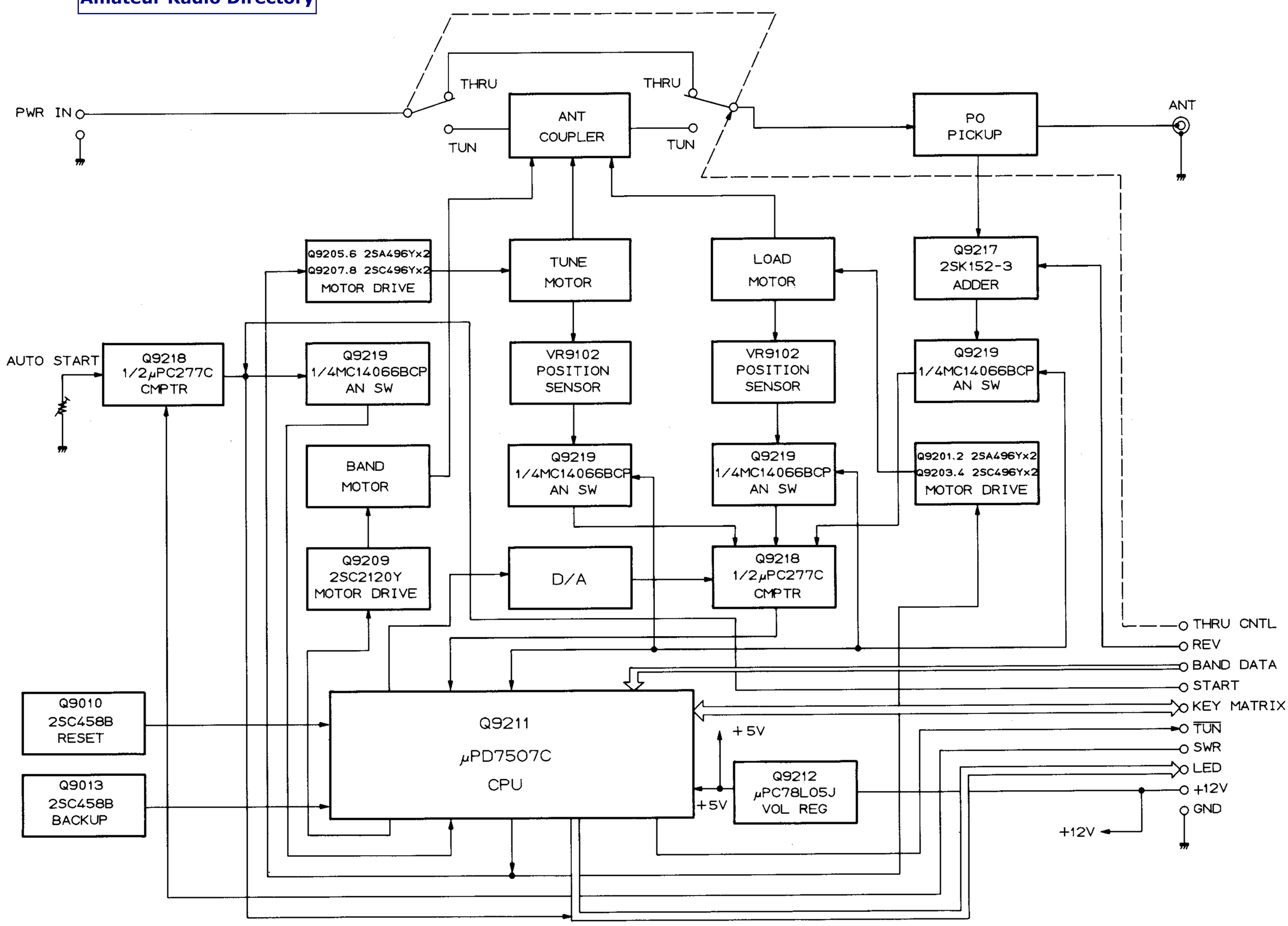

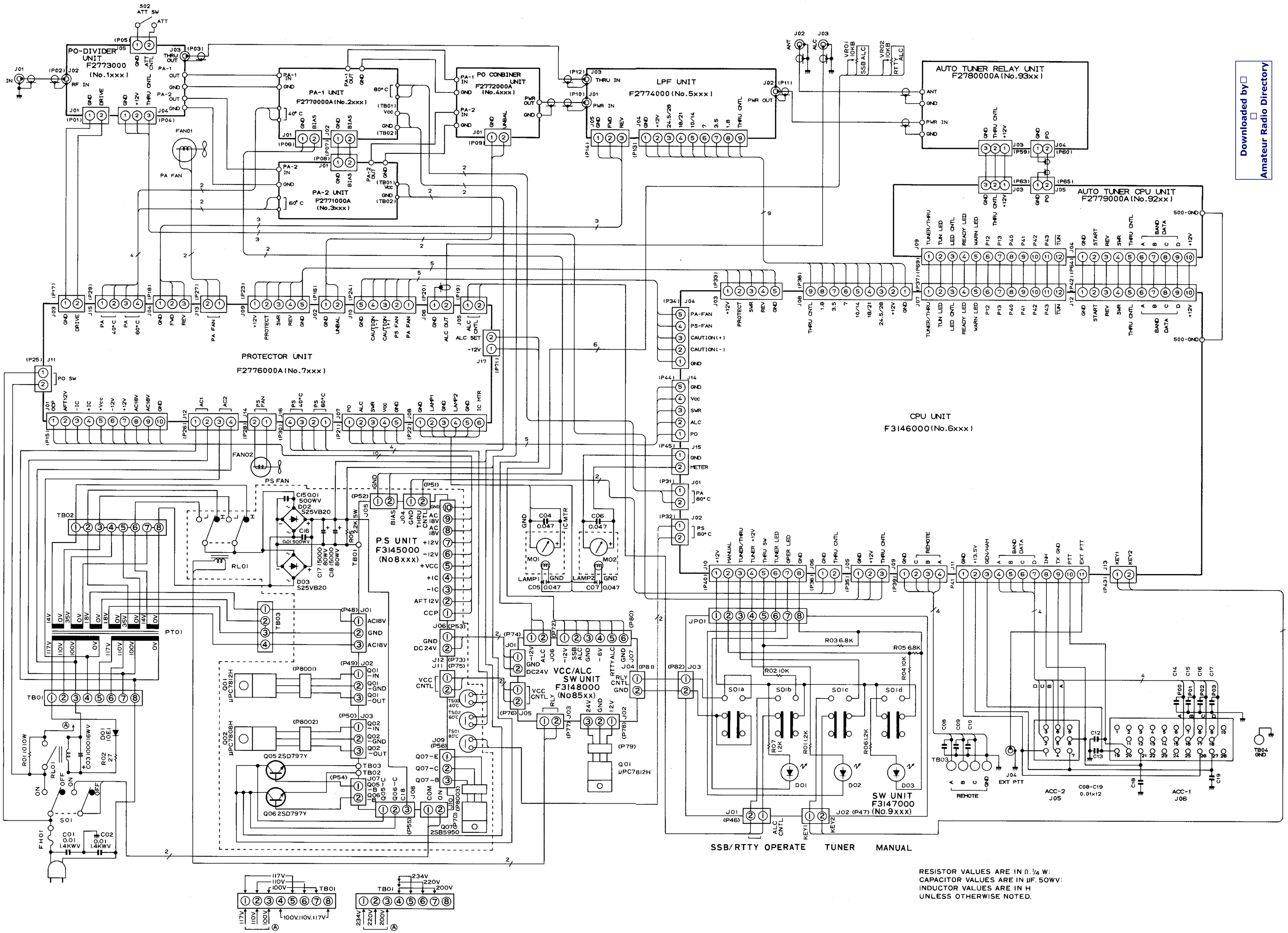

Downloaded by
Amateur Radio Directory

Downloaded by
Amateur Radio Directory

ScanEdit
UA6AP

CPU UNIT
F314000 (No.6xxx)

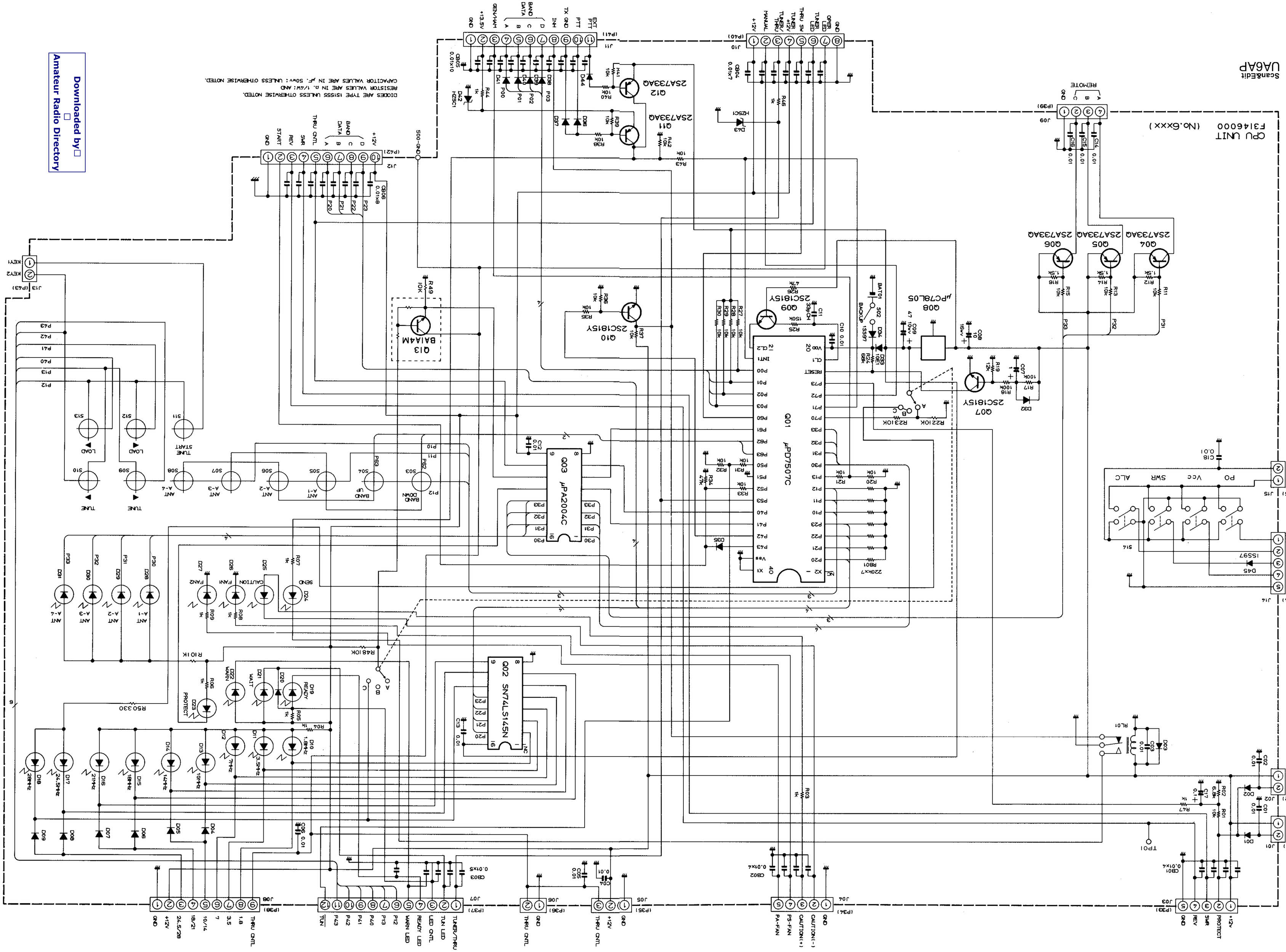

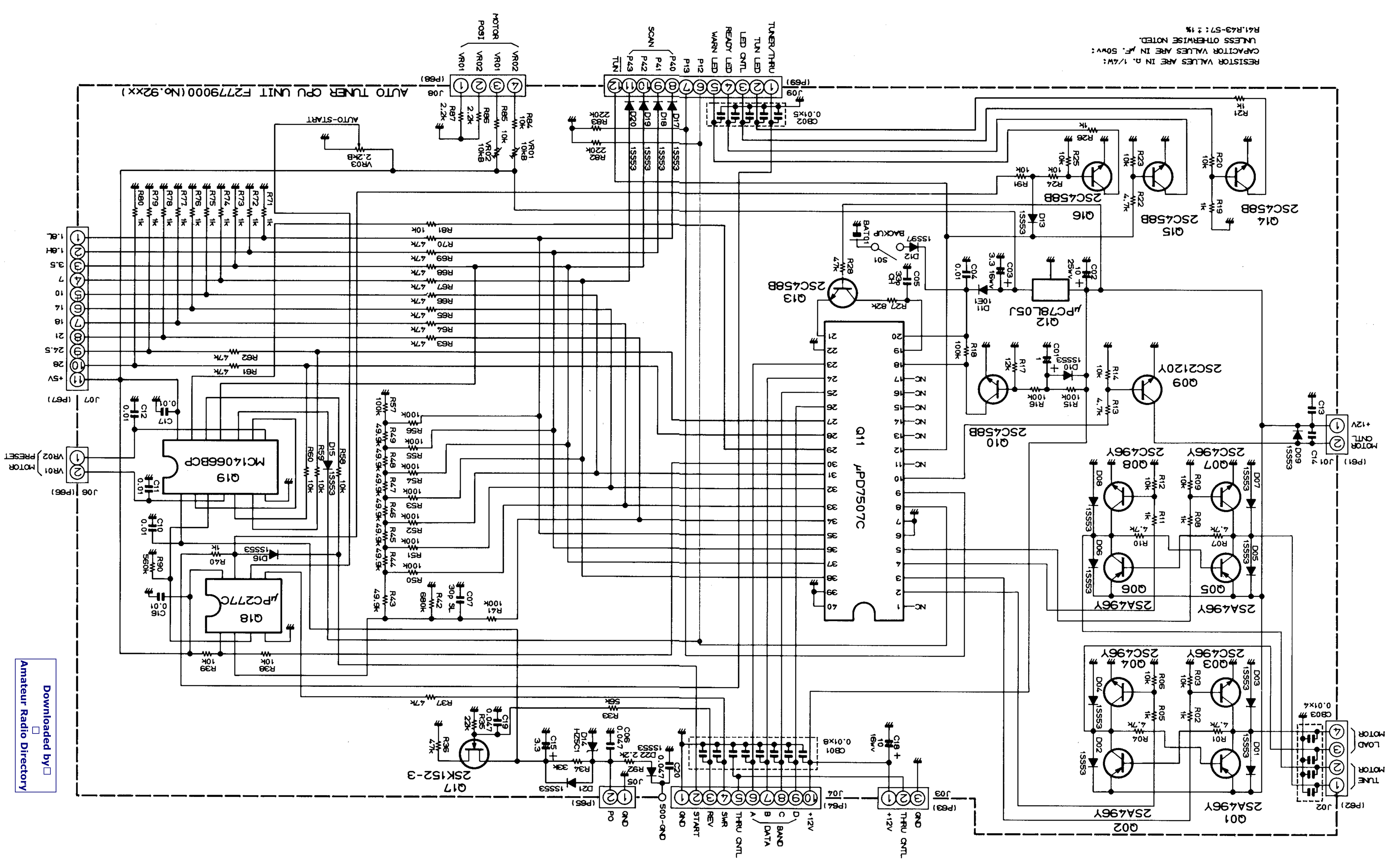

Downloaded by
Amateur Radio Directory

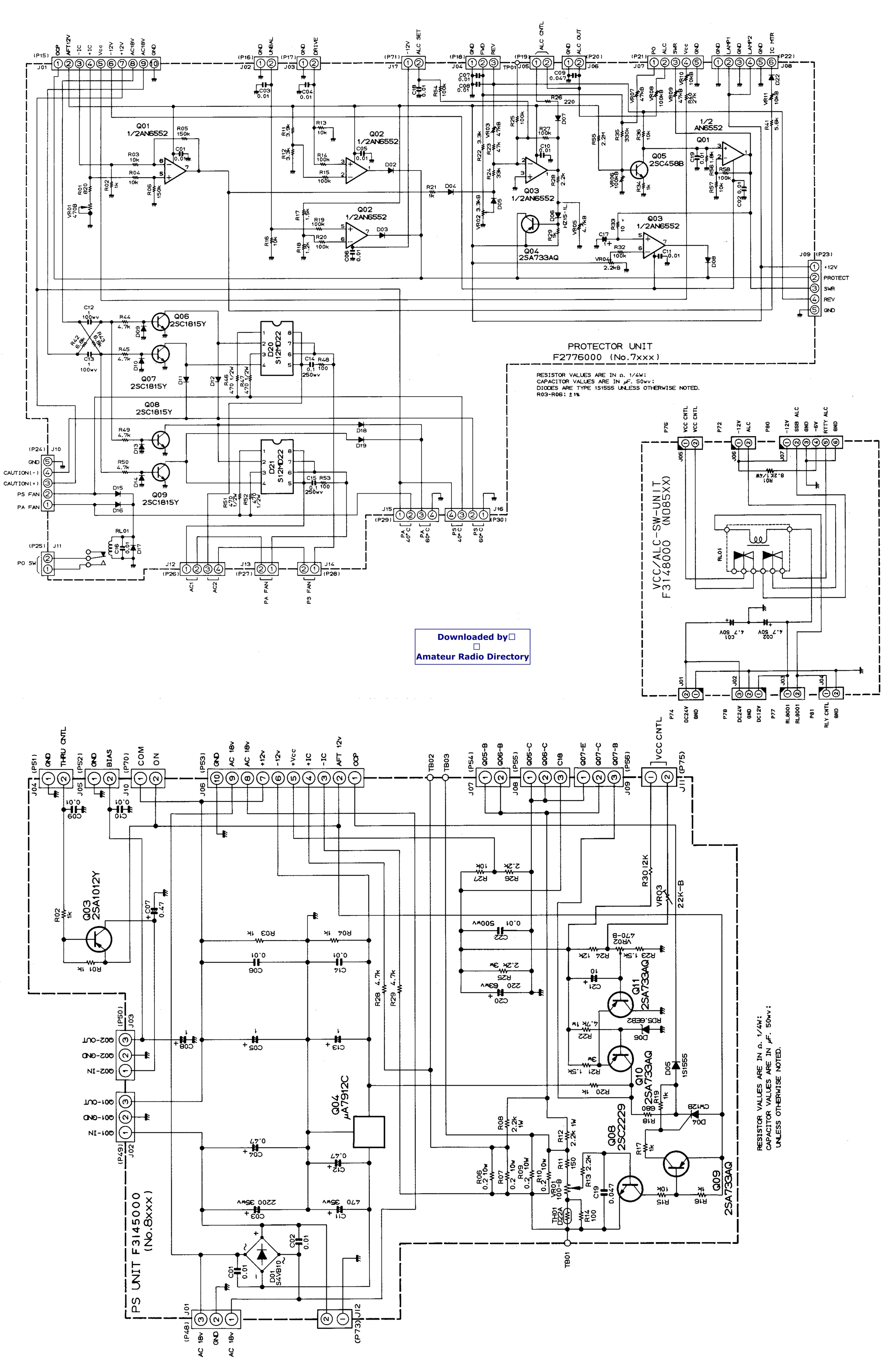

Downloaded by
Amateur Radio Directory

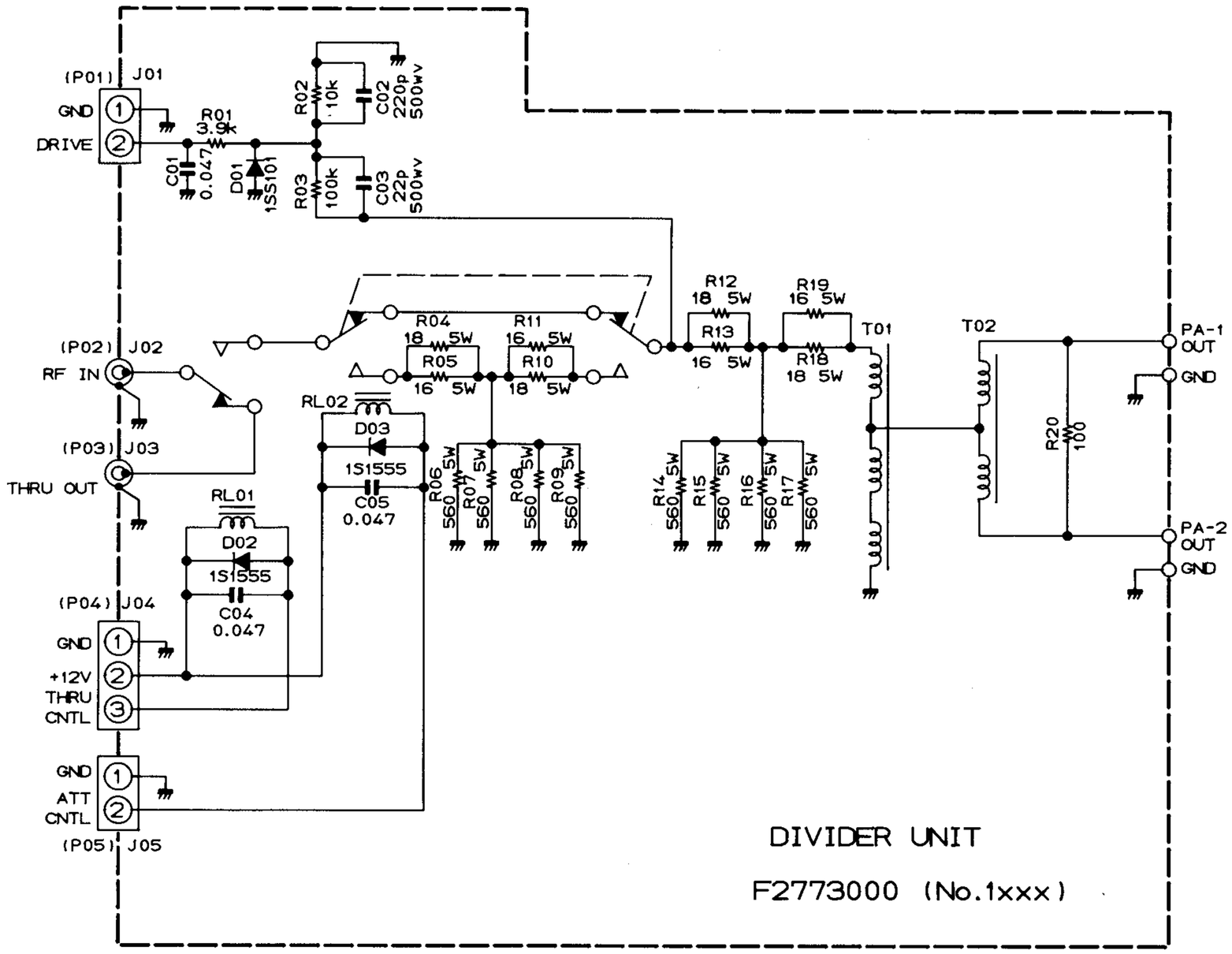

RESISTOR VALUES ARE IN Ω. 1/4W:
CAPACITOR VALUES ARE IN μF. 50wv:
UNLESS OTHERWISE NOTED.

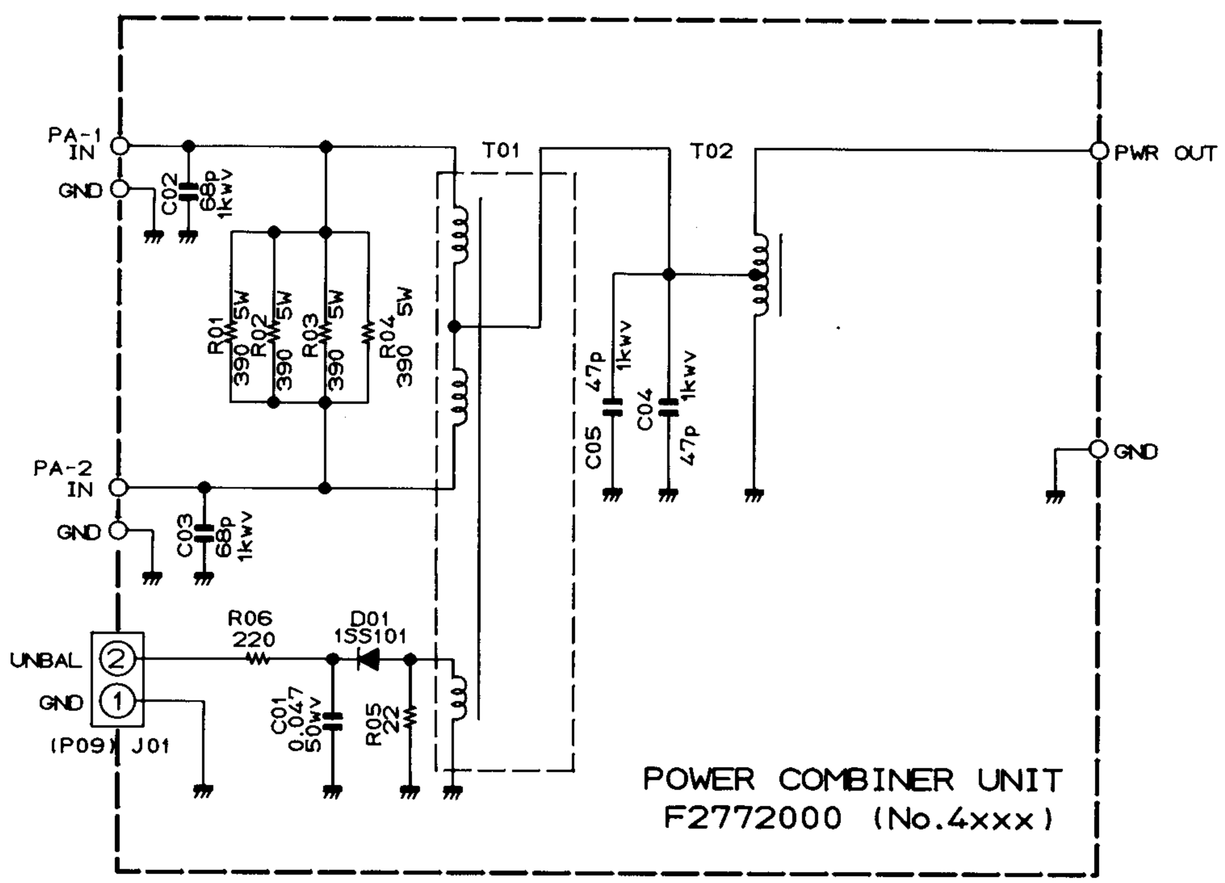

RESISTOR VALUES ARE IN Ω. 1/4W:
CAPACITOR VALUES ARE IN μF.
UNLESS OTHERWISE NOTED.

Downloaded by
Amateur Radio Directory

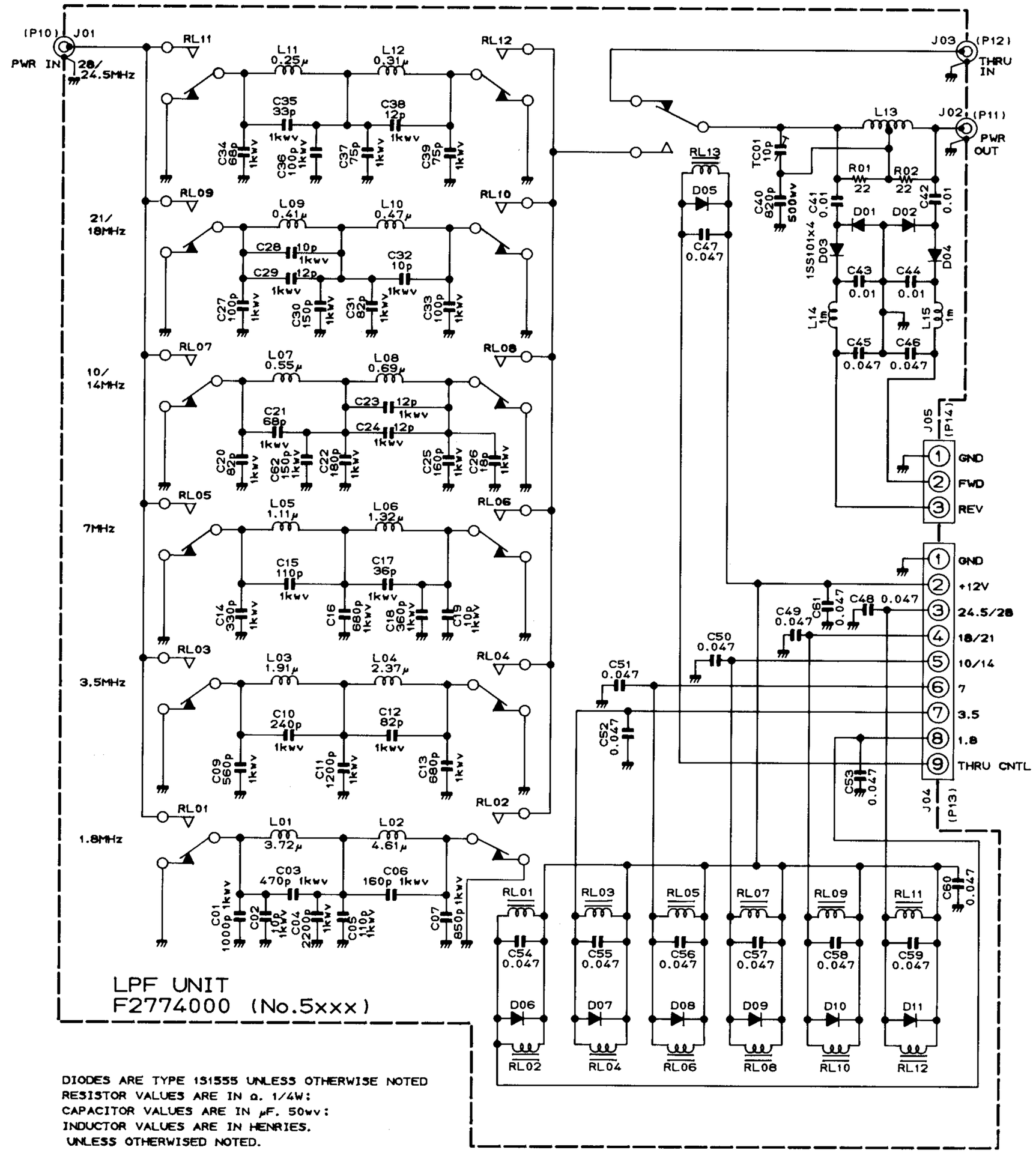

DIODES ARE TYPE 1S1555 UNLESS OTHERWISE NOTED
RESISTOR VALUES ARE IN Ω. 1/4W:
CAPACITOR VALUES ARE IN μF. 50wv:
INDUCTOR VALUES ARE IN HENRIES.
UNLESS OTHERWISED NOTED.

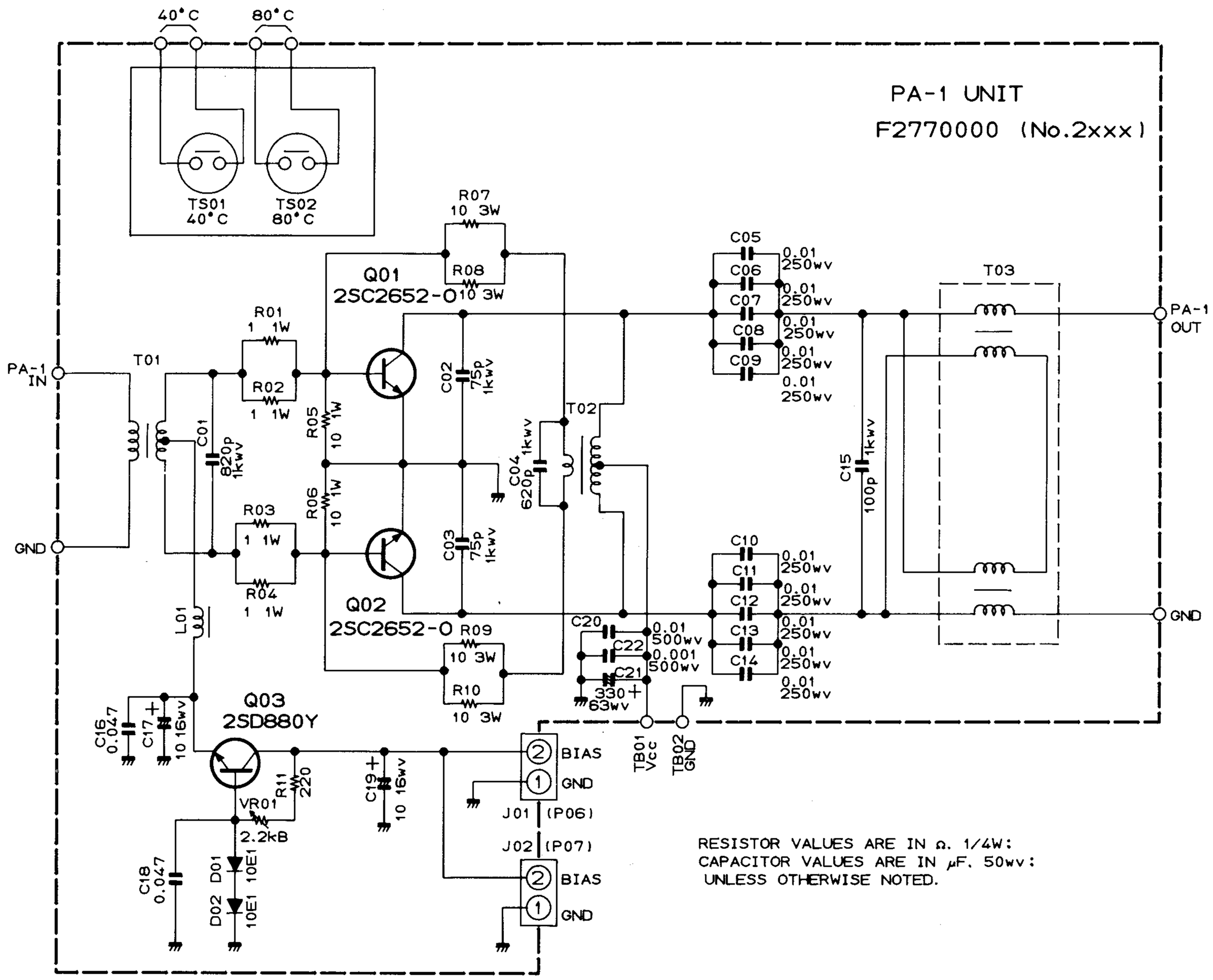

RESISTOR VALUES ARE IN Ω. 1/4W:
CAPACITOR VALUES ARE IN μF. 50wv:
UNLESS OTHERWISE NOTED.

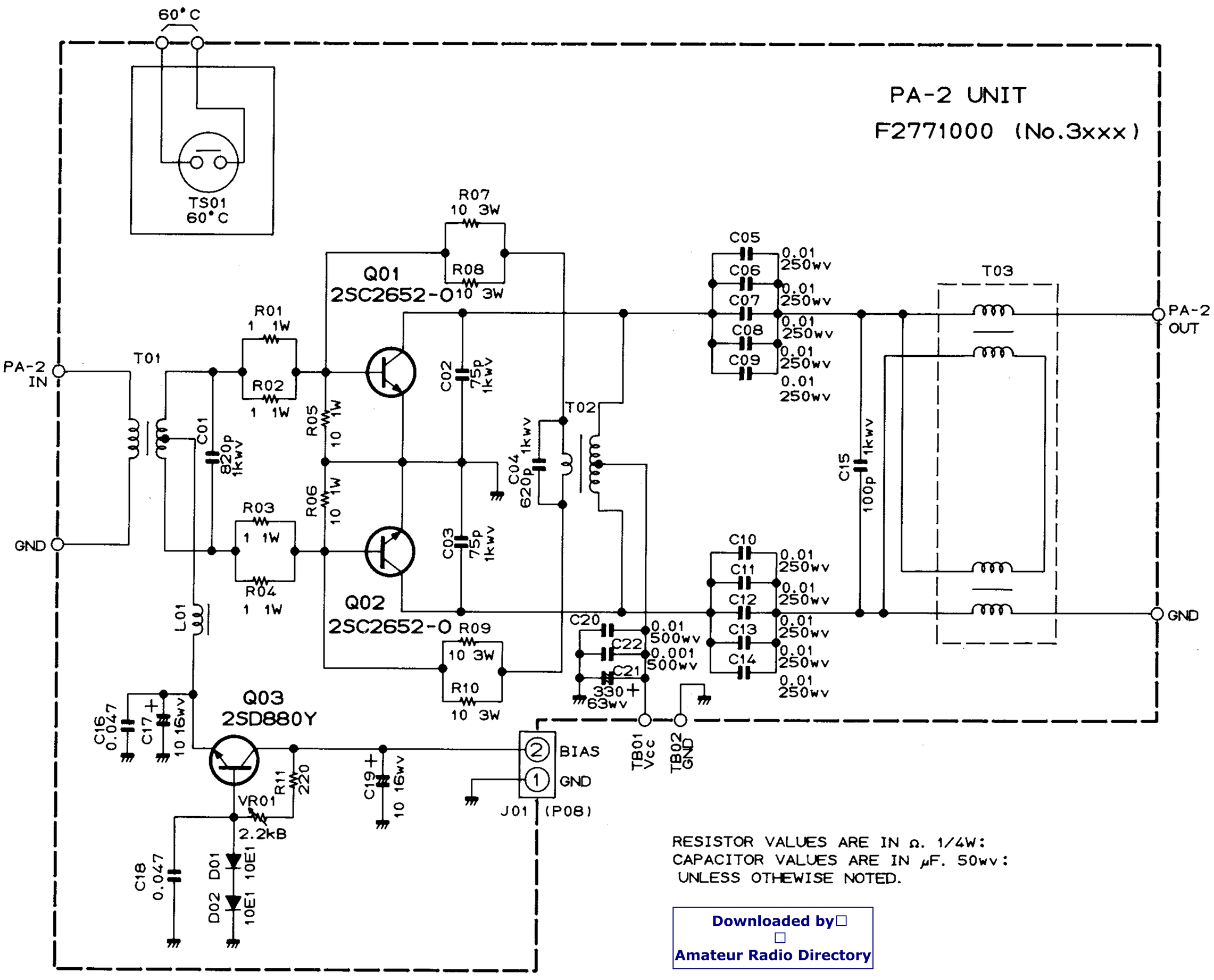

RESISTOR VALUES ARE IN Ω. 1/4W:
CAPACITOR VALUES ARE IN μF. 50wv:
UNLESS OTHEWISE NOTED.

Downloaded by
Amateur Radio Directory